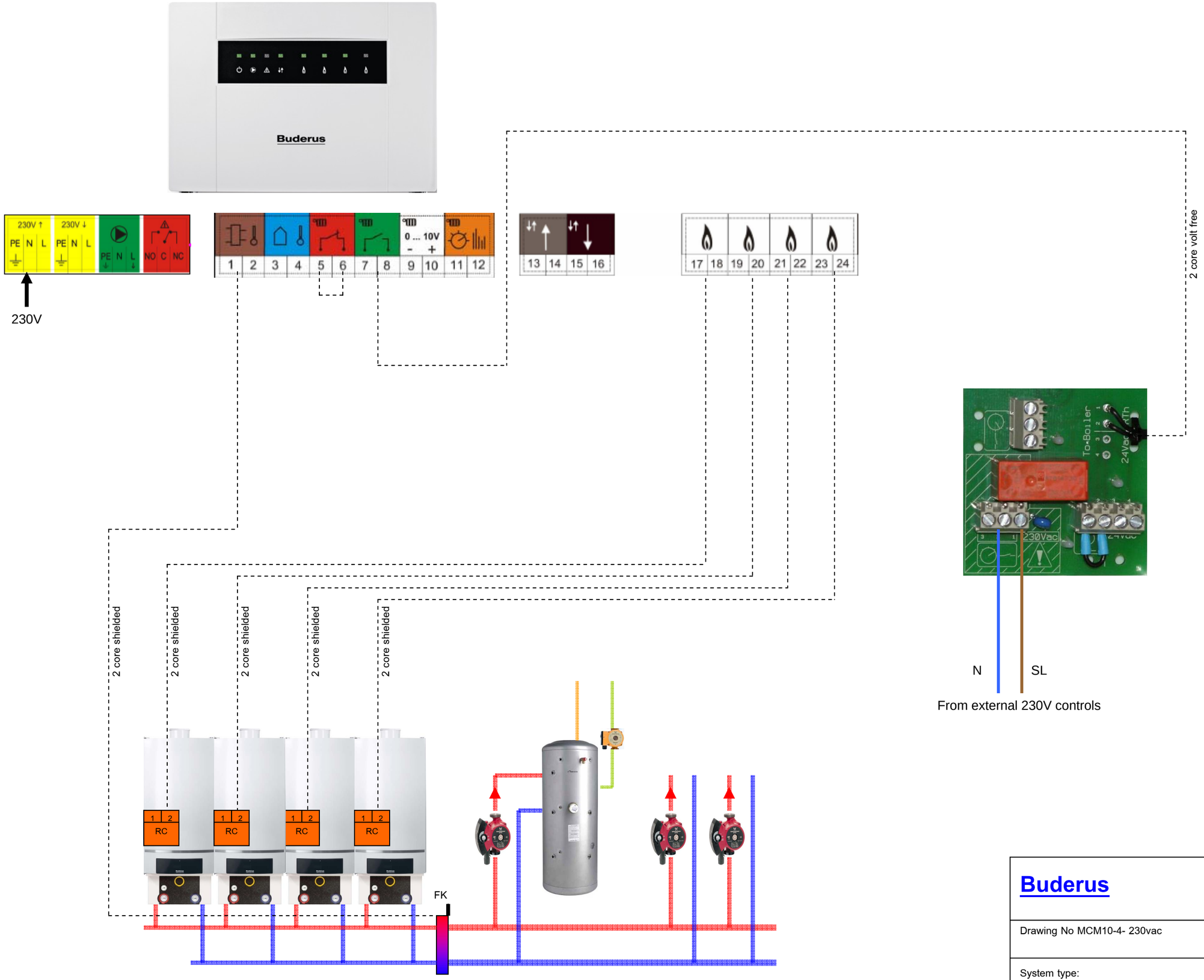

Buderus

Drawing No MCM10-4- 230vac Revision date 10/2009

System type:

4 Boiler cascade, using an RTH converter to accept a 230vac signal