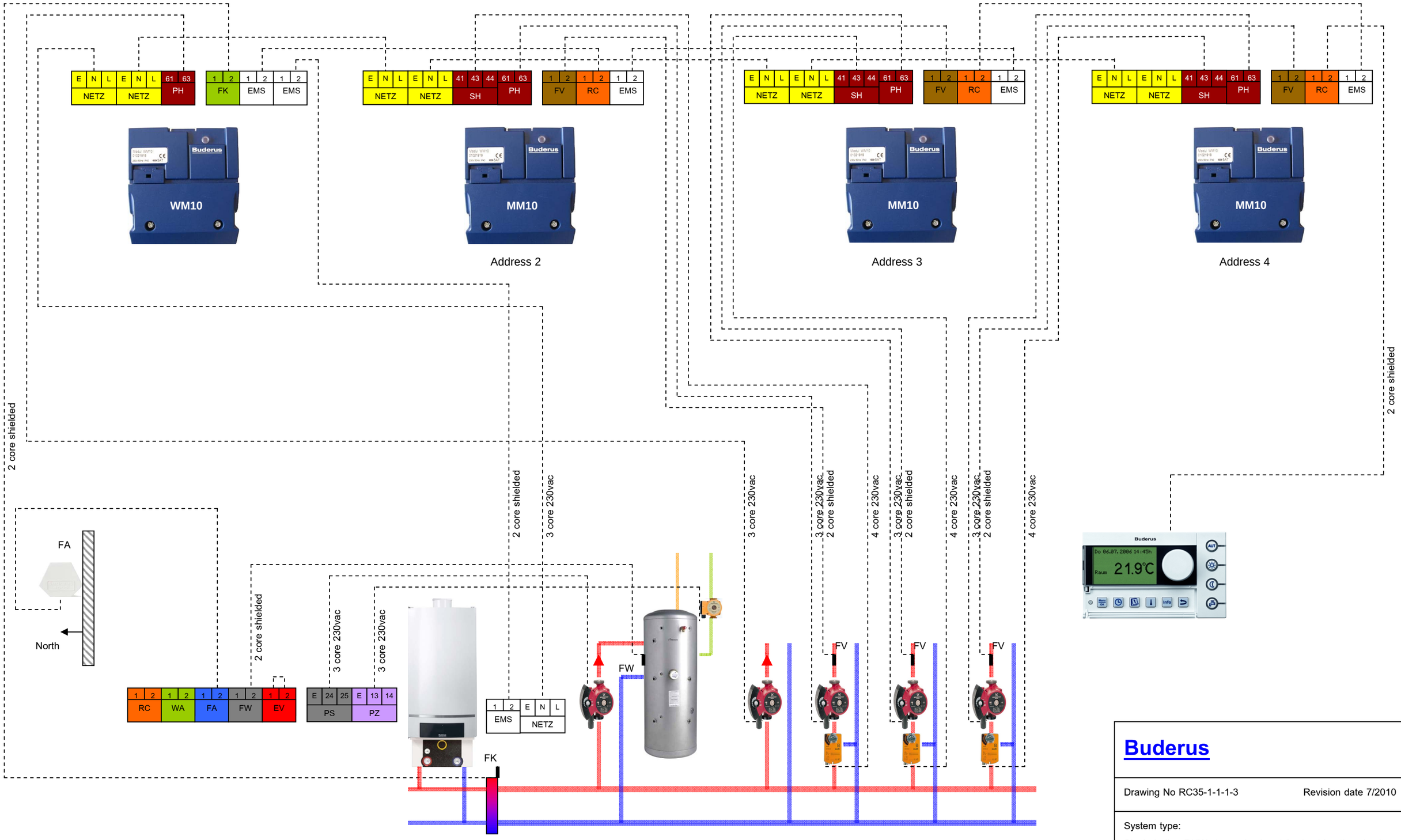

Buderus

Drawing No RC35-1-1-1-3 Revision date 7/2010

System type:

Single boiler, DHW, 1 un-mixed and 3 mixed heating circuits